Work Order ID 68666

Tuesday, April 19, 2011 3:36:34 PM

Item ID: D2161-212 **Accept** **Setup Start** **Stop**

Revision ID:

Item Name: Mirror Bracket, 212

Start Date: 4/19/2011 **Start Qty:** 4.00 **Cust Item ID:**

Required Date: 4/25/2011 **Req'd Qty:** 4.00 **Customer:**

Reference:

Approvals: **Process Plan:** N **Date:** 11-04-19 **Tooling:** _____ **Date:** _____ **Run Start** **Stop**

QC: _____ **Date:** _____ **SPC (Y/N):** _____ **Date:** _____

Sequence ID/ Work Center ID	Operation Description	Set Up/ Run Hours	Tool ID	Tool #	Plan Code	Accept Qty	Reject Qty	Reject Number	Insp. Stamp
Draw Nbr	**Revision Nbr**								
D2161	Rev B2								
100 Large Fab	Weld per dwg A/R S.S. rod Batch: M114509	0.00							
Large Fab	Large Fab					EL	11-6-14		X5
	Memo	0.00							
Large Fab	1-Assemble on Jig DT8065 as per Dwg D2161 2-Weld as per Dwg D2161 Identify as D2161-212								
110 QC	QC9- Inspect visual per QSI004- Fusion Welds	0.00							
QC	**Memo**	0.00				PC 11-06-14			
Quality Control									
120 QC	QC5- Inspect part completeness to step on W/O	0.00							
QC	**Memo**	0.00				X5			
Quality Control									

S 11/06/14

Dart Aerospace Ltd

W/O:		WORK ORDER CHANGES						
DATE	STEP	PROCEDURE CHANGE		By	Date	Qty	Approval Chief Eng / Prod Mgr	Approval QC Inspector

Part No: _____ **PAR #:** _____ **Fault Category:** _____ **NCR:** Yes No **DQA:** _____ **Date:** _____

Resolution: _____ **Disposition:** _____ **QA: N/C Closed:** _____ **Date:** _____

NCR:		WORK ORDER NON-CONFORMANCE (NCR)							
DATE	STEP	Description of NC Section A	Corrective Action Section B				Verification Section C	Approval Chief Eng	Approval QC Inspector
			Initial Chief Eng	Action Description Chief Eng		Sign & Date			

NOTE: Date & initial all entries

H:\fFORMS\Quality Assurance\approved QA\NCRWO RevE

Work Order ID 68666

Tuesday, April 19, 2011 3:36:34 PM

Item ID: D2161-212 **Accept** **Setup Start** **Stop**

Revision ID:

Item Name: Mirror Bracket, 212

Start Date: 4/19/2011 **Start Qty:** 4.00 **Cust Item ID:**

Required Date: 4/25/2011 **Req'd Qty:** 4.00 **Customer:**

Reference:

Run Start **Stop**

Approvals: **Process Plan:** _____ **Date:** _____ **Tooling:** _____ **Date:** _____

QC: _____ **Date:** _____ **SPC (Y/N):** _____ **Date:** _____

Sequence ID/ Work Center ID	Operation Description	Set Up/ Run Hours	Tool ID	Tool #	Plan Code	Accept Qty	Reject Qty	Reject Number	Insp. Stamp
130	Black Sandtex(Ref:4.3.5.7) per QSI005 4.3	0.00							
Powdercoat									
	Memo	0.00							
Powder Coating	START TIME: 10:15 ☐OVEN TEMPERATURE: 320 oF ☐FINISH TIME: 10:45								
M1169 64									
140	QC3- Inspect Part Finish	0.00							
QC									
	Memo	0.00							
Quality Control									
150	Identify as per dwg & Stock Location:_____	0.00							
Packaging									
	Memo	0.00							
Packaging									

11/06/16

11/06/16

11/6/16

Dart Aerospace Ltd

W/O:		WORK ORDER CHANGES						
DATE	STEP	PROCEDURE CHANGE	By	Date	Qty	Approval Chief Eng / Prod Mgr	Approval QC Inspector

Part No: _____ **PAR #:** _____ **Fault Category:** _____ **NCR:** Yes No **DQA:** _____ **Date:** _____

Resolution: _____ **Disposition:** _____ **QA: N/C Closed:** _____ **Date:** _____

NCR:		WORK ORDER NON-CONFORMANCE (NCR)							
DATE	STEP	Description of NC Section A	Corrective Action Section B				Verification Section C	Approval Chief Eng	Approval QC Inspector
			Initial Chief Eng	Action Description Chief Eng		Sign & Date			

NOTE: Date & initial all entries

H:\fFORMS\Quality Assurance\approved QA\NCRWO RevE

Work Order ID 68666

Tuesday, April 19, 2011 3:36:35 PM

Item ID: D2161-212 **Accept** **Setup Start**

Revision ID: **Stop**

Item Name: Mirror Bracket, 212

Start Date: 4/19/2011 **Start Qty:** 4.00 **Cust Item ID:**

Required Date: 4/25/2011 **Req'd Qty:** 4.00 **Customer:**

Reference:

Run Start

Approvals: **Process Plan:** _____ **Date:** _____ **Tooling:** _____ **Date:** _____

Stop

QC: _____ **Date:** _____ **SPC (Y/N):** _____ **Date:** _____

Sequence ID/ Work Center ID	Operation Description	Set Up/ Run Hours	Tool ID	Tool #	Plan Code	Accept Qty	Reject Qty	Reject Number	Insp. Stamp
160	QC21- Final Inspection - Work Order Release	0.00					11/6/16		
QC	Memo	0.00							
Quality Control									

JMF
11-06-16

Dart Aerospace Ltd

W/O:		WORK ORDER CHANGES					
DATE	STEP	PROCEDURE CHANGE	By	Date	Qty	Approval Chief Eng / Prod Mgr	Approval QC Inspector

Part No: _____ **PAR #:** _____ **Fault Category:** _____ **NCR:** Yes No **DQA:** _____ **Date:** _____

Resolution: _____ **Disposition:** _____ **QA: N/C Closed:** _____ **Date:** _____

NCR:		WORK ORDER NON-CONFORMANCE (NCR)						
DATE	STEP	Description of NC Section A	Corrective Action Section B			Verification Section C	Approval Chief Eng	Approval QC Inspector
			Initial Chief Eng	Action Description Chief Eng	Sign & Date			

NOTE: Date & initial all entries

H:\fFORMS\Quality Assurance\approved QA\NCRWO RevE

Picklist Print

Tuesday, April 19, 2011 3:36:40 PM

Work Order ID: 68666

Parent Item: D2161-212

Parent Item Name: Mirror Bracket, 212

Start Date: 4/19/2011 **Required Date:** 4/25/2011

Start Qty: 4.00 **Required Qty:** 4.00

Comments: IPP D□02.04.15□Added dwg Rev.B1 and finish□NG□

Component Item ID/ Item Name	Replacement Item ID	Mfg/ Purch	Bin Item	Primary Location	Last Location	Route Seq ID	Unit of Measure	Qty on Hand	Qty per Kit	Total Qty	Qty Issued	Date Issued	Status
D2013-3		Manufactured	No			100	Each	2.0000	1	4	EZ	11-6-14.	
Mirror Bracket LH, 212													
		64663x5		**Location**			**Loc Qty**		**Loc Code**				
				WA025			2						
					65064		2						
D2013-4		Manufactured	No			100	Each	2.0000	1	4	EZ	11-6-14.	
Mirror Bracket RH, 212													
				Location			**Loc Qty**		**Loc Code**				
		68664x5		WA025			2						
					65065		2						
D2037-101		Manufactured	No			100	Each	2.0000	1	4	EZ	11-6-14	
Arm													
				Location			**Loc Qty**		**Loc Code**				
				ST241A			2						
					67303		2						
		68665 x5											

Dart Aerospace Ltd

W/O:		WORK ORDER CHANGES					
DATE	STEP	PROCEDURE CHANGE	By	Date	Qty	Approval Chief Eng / Prod Mgr	Approval QC Inspector

Part No: _____ **PAR #:** _____ **Fault Category:** _____ **NCR:** Yes No **DQA:** _____ **Date:** _____

Resolution: _____ **Disposition:** _____ **QA: N/C Closed:** _____ **Date:** _____

NCR:		WORK ORDER NON-CONFORMANCE (NCR)							
DATE	STEP	Description of NC Section A	Corrective Action Section B				Verification Section C	Approval Chief Eng	Approval QC Inspector
			Initial Chief Eng	Action Description Chief Eng		Sign & Date			

NOTE: Date & initial all entries

H:\fFORMS\Quality Assurance\approved QA\NCRWO RevE

SHOP COPY
RETURN TO
ENGINEERING
UNCONTROLLED COPY
SUBJECT TO AMENDMENT
WITHOUT NOTICE
WORK ORDER
NO. 68669
B1 1204-19

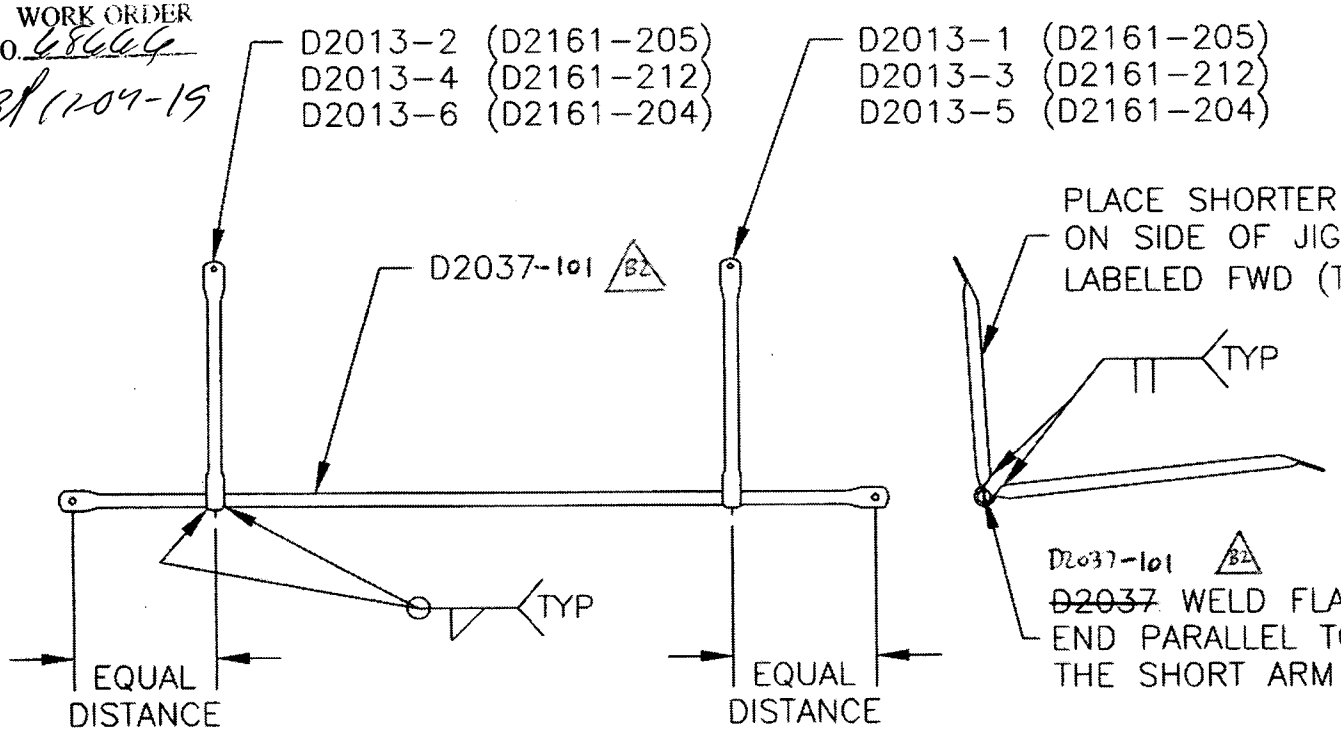

DETAIL OF D2161-204
DETAIL OF D2161-205
DETAIL OF D2161-212

NOTE: WELD ASSEMBLY
USING JIG DT8065

FINISH: ~~POWDER COAT ASSEMBLY BLACK~~
~~CRINKLE (4.3.5.3) PER DART QSI 005 4.3~~
POWDER COAT BLACK SANDTEX (4.3.5.7) PER
DART QSI 005 4.3 B1

B1	02.03.25	CHANGE FINISH		
B2	02.06.14	D2037-101 WAS D2037		
B	99.06.07	REDRAWN FOR CLARITY ADDED -204/-205/-212 DESIGNATIONS		
A	93.04.29	NEW ISSUE		

RELEASED KE 99.06.10

DART

DA COPY IS SUED

DESIGN	DRAWN BY	DART AEROSPACE LTD HAWKESBURY, ONTARIO, CANADA	
JB	RT		
CHECKED	APPROVED	DRAWING NO. D2161	REV. B
DATE 99.06.07		TITLE MIRROR BRACKET	SHEET 1 OF 1
			SCALE NTS

Copyright 1993 by DART AEROSPACE LTD

Dart Aerospace Ltd

W/O:		WORK ORDER CHANGES						
DATE	STEP	PROCEDURE CHANGE		By	Date	Qty	Approval Chief Eng / Prod Mgr	Approval QC Inspector

Part No: _____ **PAR #:** _____ **Fault Category:** _____ **NCR:** Yes No **DQA:** _____ **Date:** _____

Resolution: _____ **Disposition:** _____ **QA: N/C Closed:** _____ **Date:** _____

NCR:		WORK ORDER NON-CONFORMANCE (NCR)							
DATE	STEP	Description of NC Section A	Corrective Action Section B				Verification Section C	Approval Chief Eng	Approval QC Inspector
			Initial Chief Eng	Action Description Chief Eng		Sign & Date			

NOTE: Date & initial all entries

H:\fFORMS\Quality Assurance\approved QA\NCRWO RevE